SPS electronic

Impulse Winding Tester Series ST 3300

ST 3300

- conform to CE, acc. to EN 50 191
- PC controlled, Windows software
- recognition of: differences in number of windings, short circuits, defects and weakness in insulation
- automatic evaluation of envelope curves, amplitudes, luminous discharge
- switch matrix for 1- and 3-phase DUTs

QUALITY MANAGEMENT
Certificate
Voluntary participation in regular monitoring according to ISO 9001

www.spselectronic.com

SPS electronic

Impulse Winding Tester Series ST 3300

The impulse winding test is the best possible way to test the inner insulation of a coil. With this test method, interturn short circuits can be detected and existing defects which are not yet electric interturn short circuits are detected as well. Such existing defects will turn into an interturn short circuit only when operated by means of thermal or mechanical influences which will then inevitably lead to a breakdown of the coils.
Mainly these testers are applied in series production but also in laboratories and in development. The risk of an early failure can be substantially reduced for all high quality products such as transformers, motors, coils, inductors, etc.
The device is programmed and operated via a user-friendly WINDOWS interface. By using a hard disk as storage medium for the master curves, the storage of several thousand curves and test programmes is easily possible.

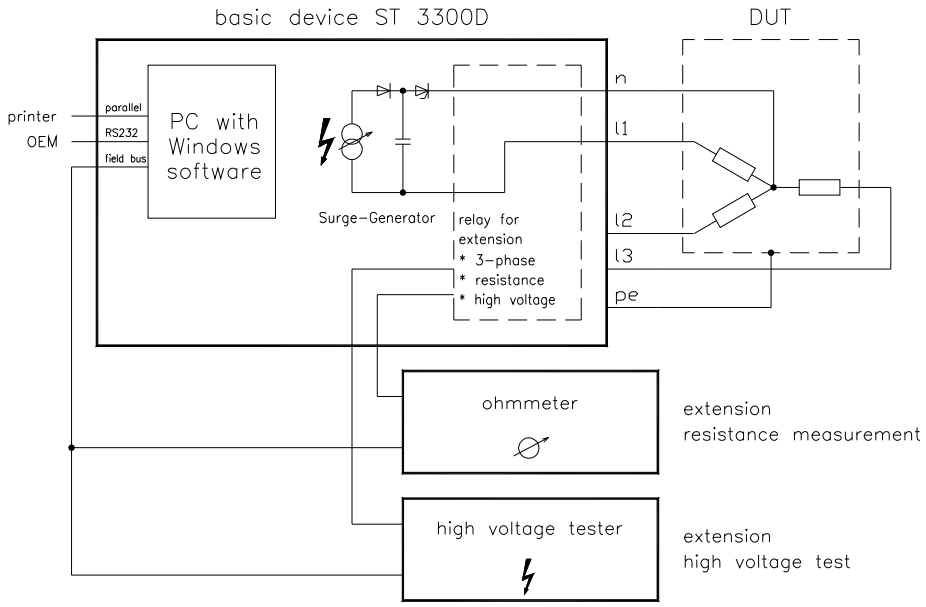

Data

- conform to CE, in accordance with EN 50 191
- fully electronic, programmable source of 500 VDC up to 6000 VDC
- surge capacity 0.047 µF
- quick break semiconductor switch for cutting in of surge capacity
- integrated PC with WINDOWS surface
  - ∗ master curve creation
  - ∗ testing
  - ∗ statistics
- recognition of:
  - ∗ faulty connection
  - ∗ short circuit
  - ∗ insulation weakness
  - ∗ luminous discharge
- automatic evaluation via software:
  - ∗ envelope curves
  - ∗ amplitude
- high voltage connections at back for test voltage

- printer interface
- free storage in PC for network card
- RS 232 – interface for OEM user
- remote control software (optional)
- PLC remote control interface
- PLC memory recall interface

Options / Optional

- change over for 3-phase DUTs
- resistance measurement
- insulation measurement up to 6000 VDC / 6 GOhm
- high voltage test up to 5000 VAC / 100 mA and 6000 VDC / 100 mA
- OEM – remote control software (WINDOWS)

Extensions

- direction of rotation recognition
- protective conductor test
- free matrix for DUTs with up to 12 coils

Art.-Nr. 28-0501.DE Technische Änderungen vorbehalten

SPS electronic GmbH
Blätteräcker 18
74523 Schwäbisch Hall
Tel: +49 – (0) 7907 / 878 – 0
Fax: +49 – (0) 7907 / 878 – 99
Germany
info@SPSelectronic.com
www.spselectronic.com